Ranches at Lake McLeod
Community Development District

Meeting Agenda

March 10, 2026

AGENDA

Ranches at Lake McLeod
Community Development District

219 E. Livingston St., Orlando, Florida 32801
Phone: 407-841-5524 – Fax: 407-839-1526

March 3, 2026

Board of Supervisors Meeting
Ranches at Lake McLeod Community Development District

Dear Board Members:

A meeting of the Board of Supervisors of the **Ranches at Lake McLeod Community Development District** will be held on **Tuesday, March 10, 2026,** at **10:00 AM** at the **Lake Alfred Public Library, 245 N Seminole Ave., Lake Alfred, FL 33850.**

Zoom Video Link: https://us06web.zoom.us/j/85615611298
Call-In Information: 1-305-224-1968 **Meeting ID:** 856 1561 1298

1. Roll Call
2. Public Comment Period (Public Comments will be limited to three (3) minutes)
3. Approval of Minutes of the March 10, 20256 Board of Supervisors Meeting
4. Consideration of Proposals for Playground Shade Structure
    A. ProPlaygrounds
    B. PlayWorx
5. Staff Reports
    A. Attorney
    B. Engineer
    C. Field Manager's Report
    D. District Manager's Report
        i. Approval of Check Register
        ii. Balance Sheet & Income Statement
    E. Project Development Update
        i. Status of Property Conveyance
        ii. Status of Permit Transfers
        iii. Status of Construction Funds & Requisitions
            a) Ratification of Series 2025 Requisitions 10 & 11
6. Other Business
7. Supervisors Requests
8. Adjournment

MINUTES

MINUTES OF MEETING
RANCHES AT LAKE MCLEOD
COMMUNITY DEVELOPMENT DISTRICT

The regular meeting of the Board of Supervisors of the Ranches at Lake McLeod Community Development District was held on Tuesday, **February 10, 2026** at 10:00 a.m. at the Lake Alfred Public Library, 245 N Seminole Ave., Lake Alfred, Florida.

Present and constituting a quorum were:

Adam Morgan	Chairman
Rob Bonin	Vice Chairman
Michelle Dudley	Assistant Secretary
Kayla Word	Assistant Secretary
Will Morgan	Assistant Secretary

Also present were:

Tricia Adams	District Manager, GMS
Mark Watts *by Zoom*	District Counsel
Kelsey Hanson Walter *by Zoom*	District Counsel
Rick Welch *by Zoom*	District Engineer
Allen Bailey	Field Services Manager

The following is a summary of the discussions and actions taken at the February 10, 2026, Ranches at Lake McLeod Community Development District's Board of Supervisors meeting.

FIRST ORDER OF BUSINESS **Roll Call**

Ms. Adams called the meeting to order and called the roll at 10:00 a.m. Five members were present in person, constituting a quorum.

SECOND ORDER OF BUSINESS **Public Comment Period**

Ms. Adams opened the public comment period.

A resident (Ana Lawton, 1241 Deepwater Circle) expressed concerns regarding the recently adopted parking policy and requested that reconsideration of the policy be placed on a future agenda. Additional residents (Chris and Jennifer Haselman, 867 Timberland Drive) asked

questions regarding community signage, crosswalks, and traffic safety concerns at certain intersections. A resident (Carol Redding, 1004 Holden Way) also asked about parking availability in the north side of the community. District staff acknowledged the comments and noted that parking rules and development would be discussed later in the meeting.

THIRD ORDER OF BUSINESS **Approval of Minutes of the January 13, 2026 Board of Supervisors Meeting**

Ms. Adams presented the minutes from the January 13, 2026, Board of Supervisors meeting. She noted that the District manager had reviewed the meeting minutes. Ms. Adams asked for any comments, corrections, or changes. The Board had no changes to the minutes.

> On MOTION by Mr. Adam Morgan, seconded by Ms. Dudley, with all in favor, the Minutes of the January 13, 2026, Board of Supervisors Meeting, were approved.

FOURTH ORDER OF BUSINESS Organizational Matters

A. Consideration of Resolution 2026-05 Appointing an Assistant Secretary

Ms. Adams presented Resolution 2026-05 appointing an Assistant Secretary to the Board. She noted that they could find a resolution in the agenda package appointing Mr. Will Morgan as Assistant Secretary.

> On MOTION by Mr. Adam Morgan, seconded by Ms. Dudley, with all in favor, Resolution 2026-05 Appointing Will Morgan as an Assistant Secretary, was approved.

FIFTH ORDER OF BUSINESS **Consideration of Towing Services Agreement with Bolton's Towing**

Ms. Adams presented the Towing Services Agreement with Bolton's Towing. She stated that this is related to the implementation of the parking rules. Staff clarified that the parking rules are not currently being enforced and outlined the steps required prior to enforcement. She stated that they have sent out one electronic mail message in cooperation with the Homeowners Association. She noted that the mail message included a cover letter, a copy of the parking rules, and a cover of the parking map. She added that at the time that the parking map was widely circulated, it was discovered that there was an error with some of the street names, so that map had

gone back to the District engineer for corrections and been returned to the District. She stated that they are updating the parking policies with the corrected map.

. Ms. Adams noted that they have another electronic mail communication to residents at Ranches that will include answering some of the frequently asked questions. She added they also have a mailed notice scheduled so all of the property owners within Ranches at Lake McLeod will receive a copy of a letter along with the parking rules and the correct parking map. Ms. Adams stated that before they can enforce the rules with towing, the Board does need to approve a proposal for parking sign installation. She noted that their field services team has been working with a vendor and they will have two options for the Board to consider at their next meeting regarding parking signs. She stated that they did reach out to Bolton's Towing. She noted that the Association at Ranches currently uses Bolton's Towing and they have been happy with their service at that location. She added that they also use Bolton's Towing at other Community Development Districts in this vicinity. She stated that Bolton's Towing reviewed the proposed form of agreement, which was provided by District counsel.

> On MOTION by Mr. Adam Morgan, seconded by Ms. Dudley, with all in favor, the Towing Services Agreement with Bolton's Towing, was approved.

SIXTH ORDER OF BUSINESS **Consideration of Contract Agreement with Polk County Property Appraiser**

Ms. Adams presented the Contract Agreement with Polk County Property Appraiser to the Board. She stated that this is an annual administrative agreement that is sent that is prepared by the property appraiser's office. She noted that their assessment team is aware of the deadlines that are provided in bold. She added that this agreement allows for the CDD to put the maintenance fees and the debt service fees on the Polk County property tax bill in the non-ad valorem section.

> On MOTION by Mr. Adam Morgan, seconded by Ms. Dudley, with all in favor, the Contract Agreement with Polk County Property Appraiser, was approved.

SEVENTH ORDER OF BUSINESS **Consideration of Resolution 2026-06 Extending Terms of Office to Coincide with General Election**

Ms. Adams presented Resolution 2026-06 Extending Terms of Office to Coincide with General Election to the Board. She stated that this resolution has been prepared by District Counsel. She noted that this resolution synchronizes the terms for the Board of Supervisors with the general election. She added that general elections are held every two years. She stated that this identifies the terms that are currently on uneven years and moves them to coincide with the general election. She noted that the terms of office that would have expired in 2027 would be extended to the November 2028 general election cycle and the terms that would have expired in 2029 are extended to the November 2030 general election cycle.

> On MOTION by Mr. Adam Morgan, seconded by Ms. Dudley, with all in favor, Resolution 2026-06 Extending Terms of Office to Coincide with General Election, was approved.

EIGHTH ORDER OF BUSINESS **Staff Reports**

A. Attorney

Mr. Watts stated he had two things he wanted to address with the Board. He stated first, they had already talked a lot about the towing policy discussion and implementation. He noted that they have received some other correspondence on that issue and it is something that they will be looking at as they work on the rollout of that process. He stated that, as for the magistrate hearing, they are working on reviewing. He noted that the Chair provided them with copies of the approved plans. He stated that they are working on a letter back to the city that they think will demonstrate that there is not any violation, that everything is within the parameters that the project was approved for. He noted that the two fence sections that are not currently present are fine without that. He added that they will copy the Board once they get that letter out to the city and keep everyone posted on where it goes with the magistrate. He stated that their hope is to get it cancelled prior to the hearing.

B. Engineer

Mr. Welch stated that they are tracking along with the contracting team and Lennar on all the sidewalk and intersection improvements, working with both the City of Eagle Lake and Polk

County as it pertains to Bomber acceptance and turning over improvements over to the County or the City as it pertains. He noted that they are making progress.

C. Field Manager's Report

Mr. Bailey presented the Field Manager's Report with the Board. He stated that they had replaced the solar lights out on the monuments and the tower lights were out and they have got those back up and working. He noted that this was a concern for the residents as to see the entrance when coming in during the night. He stated that vendors are performing as expected with the landscape. He noted that they have some dead plants from the cold snap but it is being monitored. He stated that he didn't know if it was under warranty or not because of the cold snap killing it, but they can talk to him and see what he will do. He noted that along with this, the access point that was run up at the last meeting between 1273 and 1269 deep water has been sodded, so now that access is complete. He stated that the request originally for having the meters is on page 32 in the agenda package. He noted that that is the monthly meter reading that he got going in for last month. He added that this is relative to the CUP.

Ms. Adams stated that she wanted to briefly go over an overview of step one of implementing the parking policies that the Board adopted in November 2025. She noted that there has been initial electronic mail messaging to the residents, identifying key points of the parking rules along with the parking map. She stated that the preliminary feedback really goes down to two categories. She noted that there is one category of questions where people are taken aback because they can't park in the roadway in front of their residential property. She stated that she provided clarifying information that the road is owned by the District and that the abutting property owner does not control the roadway, either by authorizing or not authorizing parking. She noted that the District has the authority to govern parking on the public roadway. She stated that the other category of questions is regarding the number of vehicles that a certain property owner may have associated with their residential property, or the number of drivers associated with their residential property. She reported she lets citizens know that the parking rules are, in order to be fair, applied evenly and not respective to the number of drivers or the number of vehicles that are affiliated with a certain home. Rather, it is the safe and effective flow of the traffic that informs the parking rules. The next step that the Board should take to implement parking rules is to review a proposal for parking signs to be considered at a future meeting.

D. District Manager's Report

i. Approval of Check Register

Ms. Adams presented the check register from January 3, 2026, through January 30, 2026, to the Board. She stated that the total amount was $710,359.93.

On MOTION by Mr. Adam Morgan, seconded by Ms. Dudley, with all in favor, the Check Register, was approved.

ii. Balance Sheet and Income Statement

Ms. Adams presented the unaudited financials through December 2025 to the Board. She noted that these are provided for informational purposes only and no Board action is required. She noted for their series 2023 debt, the interest payments were due in December 2025 and payments were properly made in accordance with the trust indenture.

E. Project Development Update

i. Status of Property Conveyance

ii. Status of Permit Transfers

iii. Status of Construction Funds & Requisitions

a) Ratification of Series 2025, AA2 – Requisition #7-9

Ms. Adams stated that they have already had some updates from the District engineer regarding some of the development items that have been discussed under public comments. She noted that they also had a request for a tot lot cover. She added, for the record, that the District has not funded any shade structure for the playground. She stated that if the Board ever wanted to consider funding that, obviously there would be an impact to CDD assessments and maintenance fees. A Board member asked if they had an idea of what the cost would be. Ms. Adams stated that if the Board wants to see the proposed cost for that, they will simply direct the field services manager to bring back a proposal. The Board agreed to go ahead and get a proposal for the cost. Ms. Adams stated that based on the Board's direction, their field services manager will bring back a proposed cost for a shade structure for the playground. She stated that if there is no discussion about property conveyance or permit transfers, she has three requisitions that the Board can review. She noted that requisition for series 2025 A82, 7, 8 and 9 for $2,100.00. She stated that these have been processed and they are looking for a motion from the Board to ratify all three.

On MOTION by Mr. Adam Morgan, seconded by Ms. Dudley, with all in favor, the Series 2025, AA2-Requisitions #7-9 were ratified.

NINTH ORDER OF BUSINESS **Other Business**

There being no comments, the next item followed.

TENTH ORDER OF BUSINESS **Supervisor's Requests and Audience Comments**

Ms. Adams asked if there were any Supervisor's requests or audience comments. There being no comments, the next item followed.

ELEVENTH ORDER OF BUSINESS **Adjournment**

Ms. Adams asked for a motion to adjourn the meeting.

On MOTION by Mr. Adam Morgan, seconded by Ms. Word, with all in favor, the meeting was adjourned.

_____ _____

Secretary / Assistant Secretary Chairman / Vice Chairman

SECTION 4

SECTION A

TRUST *the* EXPERTS

For over a decade, our customers have entrusted us to provide safe and affordable playground and recreational equipment. Our team of Certified General Contractors and Playground Safety Inspectors will insure that your project is completed to perfection, providing truly turnkey service, with every step of the process from planning and budgeting, through the installation being handled under one roof.

PRO PLAYGROUNDS

The Play & Recreation Experts

1-800-573-7529 | www.proplaygrounds.com


Untitled Map
Write a description for your map.
Legend
Polygon Measure
Ranches at Lake McLeod homes
1759
1558
1563
1176
1562
Foreman Rd
Marksman Rd
1567
1180
1568
1767
1572
1571
1184
Ranches at Lake McLeod homes
1771
1576
1575
1188
1775
1580
1579
1152
Google Earth
Image © 2025 Airbus
100 ft
N

PRO PLAYGROUNDS
The Play & Recreation Experts

Pro Playgrounds
8490 Cabin Hill Road
Tallahassee, FL 32311

Quote

Date	Estimate #
2/13/2026	56002

Project Name
Ranches at Lake McLeod shade

Customer / Bill To	Ship To
Governmental Management Services CF Marshall Tindall 219 E. Livingston St. Orlando, Fl 32801	2017 Marksman Rd. Eagle Lake, Fl 33839

GUARANTEED BEST PRICE GUARANTEED

WE WILL BEAT ANY PRICE BY 5%!

Item	Description	Qty	Cost	Total:
	1. Supply and install custom Hexagon shades structure for playground, 36 x 12 eave 2. provide Eng Dwgs 3. permitting			
	SHADE STRUCTURE			
CSSD	Custom Shade Design Hex 36ft, 12ft eave ht. (config 121860)	1	16,544.92	16,544.92
ENGDRAW	Engineered Drawings for Permitting	1	840.00	840.00
Shipping	Combined Shipping and Freight Charges	1	1,946.00	1,946.00
	MATERIALS AND INSTALLATION			
RBAR5	No. 5 Rebar	504	1.25	630.00
RMC	Ready Mix Concrete 2500 PSI MIN	12	200.00	2,400.00
LBR	Labor and Installation	1	15,008.00	15,008.00
ISPERMIT	PERMIT - STATE OF FLORIDA -	1	2,000.00	2,000.00

AGREED AND ACCEPTED:
If the above total price, scope of work, specifications, terms and conditions are acceptable, sign below indicating your acceptance and authorization for Pro Playgrounds to proceed with the work and/or sales transaction described in this quotation. Upon signature and payment in accordance with this quote, Pro Playgrounds will proceed with the work and/or sales transaction.

Signature Name / Title Date / /

Subtotal:	$39,368.92
Sales Tax: (7.5%)	$0.00
Total:	$39,368.92

Terms and Conditions - Price valid for 30 days and subject to change. 1. If installation is not included with your purchase, client will be responsible for coordinating, receiving and unloading of all goods, delivery drivers will not help unload goods. 2. Client will be responsible to inspect goods for defect, damage or missing parts, any deficiency or missing parts must be noted on delivery slip. 3. Client will be responsible for costs due to cancelled or missed delivery appointments. 4. Client has reviewed all items, colors and descriptions on this quote for accuracy and correctness. 5. If quote includes installation of goods, the installation is subject to the terms and conditions of Pro Playgrounds "Standard Installation Agreement" a copy of which may be obtained from your Sales Representative.

Hexagon Hip Shade

Diameter	36'	**Shape**	Hexagon	**Entry Height**	12'
Peak Height	17.16'	**Elbow**	Glide	**Column Mount**	Base Plate
Column Size	Ø6.6" Sch-40	**Rafter Size**	Ø5.0" 11-Ga	**Dome Qty.**	1
Column Length	12.5'	**Rafter Length**	18.73'	**Column Qty.**	6

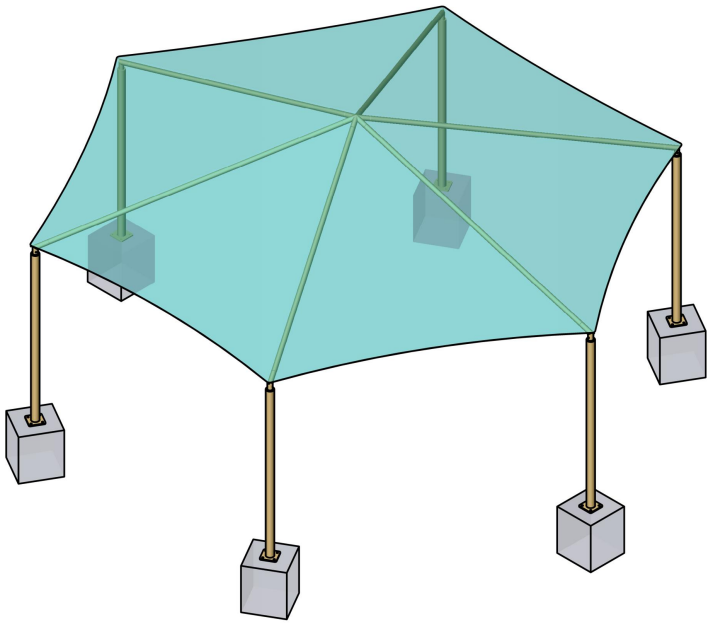

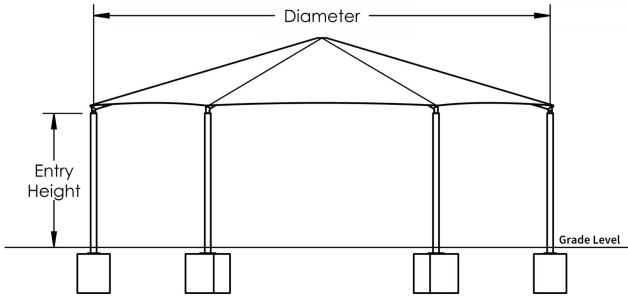

Front Elevation

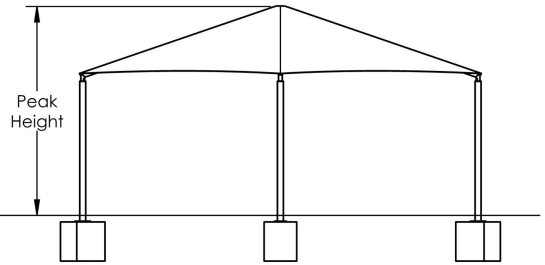

Side Elevation

Square Footing		
Column	Length & Width	Depth
Single Cap	3.3	3
Double Cap	N/A	3

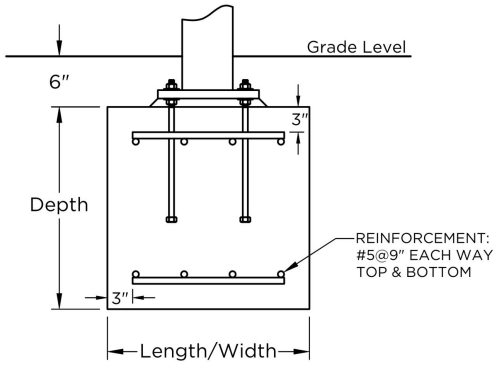

Auger Footing		
Diameter	Single Cap Depth	Double Cap Depth
1'-6"		
2'-0"	Out of range	N/A
2'-6"	5.34	N/A
3'-0"	3.71	N/A

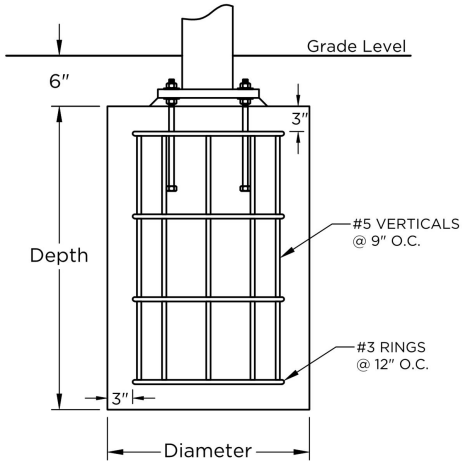

Superior Shade

QUOTE	SHADE SIZE	SHADE STYLE
121860	36 X 12	**Hexagon Hip Shade**

These drawings are for reference only and should not be used as construction details. They show the general character and rough dimensions of the structural features. Exact spans, fasteners, materials, and foundations can be determined by a licensed professional engineer upon request. Estimated footing size above is based on 1,500 PSF soil bearing pressure.

Color Options

Frame

Gloss

- Ice Butter
- Yellow
- Butterscotch
- Orange
- Red
- Burgundy
- Royal Purple
- Periwinkle
- Azure
- Sky Blue
- Blue
- Sea Mist
- Ocean
- Ice Mint
- Chartreuse
- Spring Green
- Green
- Dark Green
- Sage
- Brown
- Beige
- Vanilla
- White
- Black

Matte, Textured, or Metallic

- Champagne
- Metallic
- Bronze
- Starlight

Fabric

Traditional Fabric

This option includes colors that are California Fire Marshal certified and pass the NFPA 701 or ASTM E84 tests. Select color options are flame retardant (FR).

- Natural
- Beige
- Latte (FR)
- Desert Sand
- Brown (FR)
- Sun Blaze (FR)
- Oxide Red (FR) NEW
- Orange NEW
- Yellow
- Royal Purple
- Aquamarine NEW
- Sky Blue
- Dove Blue (FR)
- True Blue (FR)
- Aquatic Blue
- Navy Blue
- Turquoise
- Lime (FR)
- Mint Green (FR)
- Forest Green (FR)
- Brunswick Green
- Rivergum
- Midnight (FR)
- Silver (FR)
- Steel Gray
- Pearl Onyx (FR)

Dual Color Fabric

This option is available for an upcharge exclusively for our Hypar Umbrella, Triangle Sail, and Hyperbolic Sail.

- Citrus
- Sunburst
- Macaw
- Chameleon
- Topaz
- Amazonia
- Savanna
- Cobblestone
- Gold Rush
- Capri
- Santorini
- Maldives

Waterproof Fabric

This option is available exclusively for our Arched Cantilever, Flower, and Single Post and Cantilever Waterproof Umbrellas.

- Tan
- White

SECTION B

QUOTE: OE2501150
CUSTOMER: PL08063
PROJECT: 25012681

Bill To:

Ranches at Lake Mcleod
1562 marksman Rd,
Eagle Lake, FL 33839

Project Name & Location:

Ranches at Lake Mcleod Shade

Prepared by:

PLAYWORX PLAYSETS LLC
Kristine Frost
8014 CUMMING HWY,
CANTON, GA 30115

Quote Number: OE2501150
Quote Date: 2.18.2026
Valid For: 60 Days From Quote Date

Shade

Hip Shade 35x20x11
$8,609.64
Shade Installation
$10,450.00
Permit Fees
$1,500.00
Engineered Drawings
$1,250.00
Freight
$2,957.94

Totals:

Grand Total: $24,767.58

0

Sales Tax not included.
Site measurements to be confirmed.

Make Purchase Orders Out To:
Playworx Playsets, LLC
Remit Purchase Orders To:
8014 Cumming Hwy Ste 403 #313

Make Checks Payable To:
Playworx Playsets, LLC
Remit Checks To:
8014 Cumming Hwy Ste 403 #313

Canton , GA 30115 USA
786-750-3332 (phone)
kristine@playworx.com

Canton , GA 30115 USA

NOTE:
* Applicable sales taxes will be confirmed once order and any tax certificates are received
† Denotes drop ship item.
Unloading, storage, installation, surfacing and site work are not included unless specifically noted on quotation.
Not responsible for filter cloth, irrigation rerouting, grass damage, or checking for underground utilities.
If installation is quoted, it is assumed that the site has been prepared and that any grade slope in any direction does not exceed 2%. In the event that unexpected soil conditions, such as subsurface rock, are encountered during installation, additional costs to the customer will be applicable.
The acceptance signature below serves as authorization to order the items quoted and indicates acceptance of the prices listed. All terms are subject to credit approval.

COMMENTS:

This playground contains 13.28% recycled content
This playground qualifies for 1 LEED point(s)

This Quote shall not become a binding contract until signed and delivered by both Customer and Playworx Playsets, LLC. Sales Representative is not authorized to sign this Quote on behalf of PPLT or Customer, and signed Quotes cannot be accepted from Sales Representative. To submit this offer, please sign below and forward a complete signed copy of this Quote directly to kristine@playworx.com. Upon acceptance, PPLT will return a fully-signed copy of the Quote to Customer (with copy to Sales Representative) via fax or e mail.

THIS QUOTE IS LIMITED TO AND GOVERNED BY THE TERMS CONTAINED HEREIN. PPLT objects to any other terms proposed by Customer, in writing or otherwise, as material alterations, and all such proposed terms shall be void. Customer authorizes PPLT to ship the Equipment and agrees to pay PPLT the total amount specified. Shipping terms are FOB the place of shipment via common carrier designated by PPLT. Payment terms are 50% down and 50% upon project completion. Customer agrees to pay all additional service charges for past due invoices. Customer must provide proper tax exemption certificates to PPLT, and shall promptly pay and discharge all otherwise applicable taxes, license fees, levies and other impositions on the Equipment at its own expense.

CUSTOMER hereby submits its offer to purchase the Equipment ACCORDING TO THE terms stated in this quote AND subject to final approval BY PPLT.

_____	_____	_____
Submitted By	**Printed Name and Title**	**Date**

The foregoing Quote and OFFER ARE hereby approved and accepted by Playworx playsets, LLC.

By: _____ Date:_____
_____
_____

ADDITIONAL TERMS & CONDITIONS OF SALE
1. Use & Maintenance. Customer agrees to regularly inspect and maintain the Equipment, and to provide, inspect and maintain appropriate safety surfacing under and around the Equipment, in accordance with PPLT's product literature and the most current Consumer Product Safety Commission Handbook for Public Playground Safety.
2. Default, Remedies & Delinquency Charges. Customer's failure to pay any invoice when due, or its failure to otherwise comply with the terms of this Quote, shall constitute a default under all unsatisfied invoices ("Event of Default"). Upon an Event of Default, PPLT shall have all remedies available to it at law or equity, including, without limitation, all remedies afforded a secured creditor under the Uniform Commercial Code. Customer agrees to assist and cooperate with PPLT to accomplish its filing and enforcement of mechanic's or other liens with respect to the Equipment or its location or its repossession of the Equipment, and Customer expressly waives all rights to possess the Equipment after an Event of Default. All remedies are cumulative and not alternative, and no exercise by PPLT of a remedy will prohibit or

waive the exercise of any other remedy. Customer shall pay all reasonable attorneys' fees plus any costs of collection incurred by PPLT in enforcing its rights hereunder. Subject to any limitations under law, Customer shall pay to PPLT as liquidated damages, and not as a penalty, an amount equal to 1.5% per month of any payment that is delinquent in such month and is not received by PPLT within ten (10) days after the date on which due.

3. Limitation of Warranty/ Indemnity. PPLT MAKES NO EQUIPMENT WARRANTIES EXCEPT FOR THOSE STANDARD WARRANTIES ISSUED WITH THE EQUIPMENT, WHICH ARE INCORPORATED HEREIN BY THIS REFERENCE. PPLT SPECIFICALLY DISCLAIMS ANY IMPLIED WARRANTY OF MERCHANTABILITY OR FITNESS FOR A PARTICULAR PURPOSE AND ANY LIABILITY FOR INCIDENTAL OR CONSEQUENTIAL DAMAGES. CUSTOMER AGREES TO DEFEND, INDEMNIFY AND SAVE PPLT HARMLESS FROM ALL CLAIMS OF ANY KIND FOR DAMAGES OF ANY KIND ARISING OUT OF CUSTOMER'S ALTERATION OF THE EQUIPMENT, ITS FAILURE TO MAINTAIN THE EQUIPMENT, ITS FAILURE TO PROPERLY SUPERVISE EQUIPMENT USE, OR ITS FAILURE TO PROVIDE AND MAINTAIN APPROPRIATE TYPES AND DEPTHS OF SAFETY SURFACING BENEATH AND AROUND THE EQUIPMENT IN ACCORDANCE WITH PPLT'S INSTALLATION AND OWNER'S MANUALS AND THE MOST CURRENT CONSUMER PRODUCT SAFETY COMMISSION HANDBOOK FOR PUBLIC PLAYGROUND SAFETY.

4. Restrictions. Until all amounts due hereunder are paid in full, Customer shall not: (i) permit the Equipment to be levied upon or attached under any legal process; (ii) transfer title to the Equipment or any of Customer's rights therein; or (iii) remove or permit the removal of the Equipment to any location not specified in this Quote.

5. Purchase Money Security Interest. Customer hereby grants, pledges and assigns to PPLT, and PPLT hereby reserves a purchase money security interest in, the Equipment in order to secure the payment and performance in full of all of Customer's obligations hereunder. Customer agrees that PPLT may file one or more financing statements, in order to allow it to perfect, acquire and maintain a superior security interest in the Equipment.

6. Choice of Law and Jurisdiction. All agreements between Customer and PPLT shall be interpreted, and the parties' obligations shall be governed, by the laws of the State of Missouri without reference to its choice of law provisions. Customer hereby consents to the personal jurisdiction of the state and federal courts located in the city and county of St. Louis, Missouri.

7. Title; Risk of Loss; Insurance. PPLT Retains full title to all Equipment until full payment is received by PPLT. Customer assumes all risk of loss or destruction of or damage to the Equipment by reason of theft, fire, water, or any other cause, and the occurrence of any such casualty shall not relieve the Customer from its obligations hereunder and under any invoices. Until all amounts due hereunder are paid in full, Customer shall insure the Equipment against all such losses and casualties.

8. Waiver; Invalidity. PPLT may waive a default hereunder, or under any invoice or other agreement between Customer and PPLT, or cure such a default at Customer's expense, but shall have no obligation to do either. No waiver shall be deemed to have taken place unless it is in writing, signed by PPLT. Any one waiver shall not constitute a waiver of other defaults or the same kind of default at another time, or a forfeiture of any rights provided to PPLT hereunder or under any invoice. The invalidity of any portion of this Quote shall not affect the force and effect of the remaining valid portions hereof.

9. Entire Agreement; Amendment; Binding Nature. This fully-executed Quote, as supplemented by Change Orders and invoices containing exact amounts of estimates provided herein, constitutes the complete and exclusive agreement between the parties. A Change Order is a written instrument signed by the Customer and PPLT stating their agreement as to any amendment in the terms of this Quote. Customer acknowledges that Change Orders may result in delays and additional costs. The parties agree that all Change Orders shall include appropriate adjustments in price and time frames relating to any requested amendments. Upon full execution, this Quote shall be binding upon and inure to the benefit of the parties and their successors and assigns.

10. Counterparts; Electronic Transmission. This Quote, any invoice, and any other agreement between the parties, may be executed in counterparts, each of which shall constitute an original. The facsimile or other electronic transmission of any signed original document, and retransmission of any signed facsimile or other electronic transmission, shall be the same as the transmission of an original. At the request of either party, the parties will confirm facsimile or other electronically transmitted signatures by signing an original document.


1755
1554
1559
1759
1558
Marksman Rd
1562 Marksman Rd
1562
Image © 2025 Airbus
Google Earth

SHADESURE™ FABRIC

Lead & Phthalate Free*

HEAT PROTECTION

UV PROTECTION

HAIL PROTECTION

WHITE SHADE 57% UV 86%	**SILVER** SHADE 88% UV 93%	**LAGUNA BLUE** SHADE 92% UV 96%	**ROYAL BLUE** SHADE 86% UV 94%

NAVY BLUE SHADE 90% UV 94%	**TURQUOISE** SHADE 83% UV 92%	**RAINFOREST** SHADE 89% UV 96%	**DESERT SAND** SHADE 80% UV 92%	**BLACK** SHADE 95% UV 96%	**SUNFLOWER YELLOW** SHADE 70% UV 94%	**TERRACOTTA** SHADE 84% UV 90%	**ARIZONA** SHADE 86% UV 91%

ATOMIC ORANGE SHADE 82% UV 94%	**RED** SHADE 91% UV 92%	**MULBERRY** SHADE 90% UV 91%	**ELECTRIC PURPLE** SHADE 84% UV 90%	**ZESTY LIME** SHADE 83% UV 92%	**CINNAMON** SHADE 88% UV 93%	**OLIVE** SHADE 93% UV 97%	**CHOCOLATE** SHADE 92% UV 93%

Our fabrics carry a 10-year limited manufacturer's warranty from the date of installation against failure from significant fading, deterioration, breakdown, mildew, outdoor heat, cold, or discoloration, with the exceptions of Sunflower Yellow, Atomic Orange, Red, Mulberry, Electric Purple, Zesty Lime, Cinnamon, Olive, and Chocolate which carry a 5-year pro-rated warranty. Coolbrella shade structure fabrics carry a 3-year warranty. Should the fabric need to be replaced under the warranty, USA SHADE will manufacture and ship a new replacement fabric at no charge for the first six years, thereafter pro-rated at 20% per year over the last four years.

* Shadesure™ Red does not pass CPSC-CH-E1002-08.1. Contact your rep for more details.

ASTM INTERNATIONAL
Standards Worldwide
ASTM E84

NFPA INTERNATIONAL
NFPA 701
Test Method 1
Test Method 2

USASHADE
& Fabric Structures®

Corporate Headquarters
DFW International Commerce Park
2580 Esters Blvd, Suite 100
DFW Airport, Texas 75261
PH: 214.905.9500
TF: 800.966.5005

West Coast Office
PH: 714.427.6981

Southeast Office
PH: 214.905.9500

www.usa-shade.com

STANDARD POWDER COAT
COLORS

FADE RESISTANT

SCRATCH RESISTANT

MAXIMUM ADHESION

BLACK
115618BLK

COBALT
115618CBB

BLUE
115618BLU

FOREST GREEN
115618FRG

RED
115618RED

YELLOW
115618YLW

DARK BROWN
115618DBW

LIGHT IVORY
115893

WHITE
115618WHT

TELE-GRAY
115892

Powder coating provides maximum adhesion, UV protection and fade resistance. Available in a wide range of colors, this coating has higher surface hardness/scratch resistance than common liquid paints.

Powder coat colors may vary slightly based on the media of which flyer is printed out on or distributed as PDF.

USASHADE
& Fabric Structures®

www.usa-shade.com

Corporate Headquarters
DFW International Commerce Park
2580 Esters Blvd, Suite 100
DFW Airport, Texas 75261
PH: 214.905.9500
TF: 800.966.5005

West Coast Office
PH: 714.427.6981

Southeast Office
PH: 214.905.9500

SECTION 5

SECTION C

Ranches at lake Mcleod CDD

Field Management Report

Completed

- The fence on the East side of Ranches North was blown out and has been placed back up.

Contracted Services

- The vendors are performing as expected.
- The landscape vendor is reviewing damaged plants and will be submitting a proposal for replacement.

Review

- The fence is back up at 603 Trotters Dr, preventing the Landscape from accessing the irrigation clock.

Ranches at Lake Mcleod CDD

Field Management Report

Supplement Report

- The section at the end of Craftsman Road heading to the boat dock parking lot is having complaints of speeding, and residents have requested a stop sign

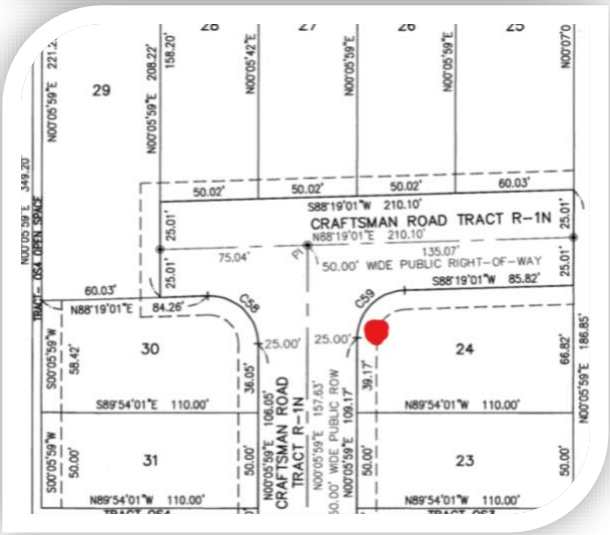

Ranches at Lake Mcleod CDD

Field Management Report

Supplement Report

- This month's Meter report.

SECTION D

SECTION i

Ranches at Lake McLeod
Community Development District

Summary of Check Register

January 31, 2026 to February 27, 2026

Fund	Date	Check No.'s			Amount
General Fund					
	2/12/26	226		$	816.00
	2/18/26	227-230		$	13,375.35
			Total:	$	14,191.35
		Autodrafts		$	14,031.42
			Total:	$	14,031.42
Payroll					
	Supervisor Fees - February 2026				
	Adam Morgan	10154		$	184.70
	Patrick Bonin	10155		$	184.70
	Michelle Dudley	10156		$	184.70
	Kayla Word	10157		$	184.70
			Total:	$	738.80
			Total Amount	**$**	**28,961.57**

*** CHECK DATES 01/31/2026 - 02/27/2026 ***
RANCHES AT LAKE MCLEOD
BANK A GENERAL FUND

CHECK DATE	VEND#	.....INVOICE..... DATE	INVOICE	...EXPENSED TO... YRMO	DPT ACCT# SUB SUBCLASS	VENDOR NAME	STATUS	AMOUNT	....CHECK..... AMOUNT	#
2/12/26	00004	2/04/26	78104	202601	310-51300-31500		*	816.00		
			ATTORNEY SVCS-JAN26							
						COBB & COLE PA			816.00	000226
2/18/26	00042	2/16/26	9078424	202602	310-51300-42000		*	973.23		
			DATA CONVERSION MAILING							
						ACTION MAIL			973.23	000227
2/18/26	00013	2/01/26	77	202602	320-53800-12000		*	858.33		
			FIELD MANAGEMENT-FEB26							
		2/01/26	78	202602	310-51300-34000		*	3,647.92		
			MANAGEMENT FEES-FEB26							
		2/01/26	78	202602	310-51300-35200		*	103.00		
			WEBSITE MANAGEMENT-FEB26							
		2/01/26	78	202602	310-51300-35100		*	154.50		
			INFORMATION TECH-FEB26							
		2/01/26	78	202602	310-51300-31300		*	550.00		
			DISSEMINATION SVCS-FEB26							
		2/01/26	78	202602	310-51300-51000		*	.54		
			OFFICE SUPPLIES							
		2/01/26	78	202602	310-51300-42000		*	13.37		
			POSTAGE							
						GOVERNMENTAL MANAGEMENT SERVICES-CF			5,327.66	000228
2/18/26	00022	2/16/26	02162026	202602	300-20700-10000		*	3,383.32		
			DEBT SVC TXFER S2023							
		2/16/26	02162026	202602	300-20700-10000		*	2,112.62		
			DEBT SVC TXFER S2025							
						RANCHES AT LAKE MCLEOD CDD			5,495.94	000229
2/18/26	00015	2/16/26	50000467	202601	320-53800-43100		*	1,578.52		
			CONTRACT#3000000380-JAN26							
						TECO			1,578.52	000230
						TOTAL FOR BANK A		14,191.35		

*** CHECK DATES 01/31/2026 - 02/27/2026 ***
RANCHES AT LAKE MCLEOD
BANK Z GENERAL FUND AUTOPAY

CHECK DATE	VEND#	.....INVOICE..... DATE	INVOICE	...EXPENSED TO... YRMO	DPT ACCT# SUB	SUBCLASS	VENDOR NAME	STATUS	AMOUNT	....CHECK..... AMOUNT	#
2/03/26	00024	2/15/26	7145-01. 910 CRAFTSMAN RD-JAN.26	202601	320-53800-43200		CITY OF EAGLE LAKE	*	1,384.30	1,384.30	080038
2/03/26	00024	2/15/26	7614-01. 1562 MARKSMAN RD-JAN.26	202601	320-53800-43200		CITY OF EAGLE LAKE	*	374.64	374.64	080039
2/03/26	00024	2/15/26	8065-01. 0 CRAFTSMAN RD-JAN.26	202601	320-53800-43200		CITY OF EAGLE LAKE	*	675.00	675.00	080040
2/11/26	00015	2/10/26	1120-01. RANCHES EAST-JAN.26	202601	320-53800-43100		TECO	*	3,252.60	3,252.60	080041
2/11/26	00015	2/10/26	1626-01. RANCHES NORTH-JAN.26	202601	320-53800-43100		TECO	*	2,613.70	2,613.70	080042
2/11/26	00015	2/10/26	2826-01. 906 CRAFTSMAN RD-JAN.26	202601	320-53800-43000		TECO	*	25.48	25.48	080043
2/11/26	00015	2/10/26	6073-01. 2926 BOMBER RD-JAN.26	202601	320-53800-43000		TECO	*	454.12	454.12	080044
2/11/26	00015	2/10/26	6081-01. 889 CRAFTSMAN RD-JAN.26	202601	320-53800-43000		TECO	*	140.37	140.37	080045
2/11/26	00015	2/10/26	9635-01. RANCHES CENTRAL-JAN.26	202601	320-53800-43100		TECO	*	5,111.21	5,111.21	080046

TOTAL FOR BANK Z 14,031.42

TOTAL FOR REGISTER 28,222.77

SECTION ii

Ranches at Lake McLeod

Community Development District

Unaudited Financial Reporting

January 31, 2026

Table of Contents

Ranches at Lake McLeod

Community Development District

Combined Balance Sheet

January 31, 2026

	General Fund	*Debt Service Fund*	*Capital Projects Fund*	*Capital Reserve Fund*	*Totals Governmental Funds*
Assets:					
Cash	$ 166,298	$ -	$ -	$ -	$ 166,298
State Board of Administration	$ 508,410	$ -	$ -	$ -	$ 508,410
Capital Reserve Account	$ -	$ -	$ -	$ 103,537	$ 103,537
Due from General Fund	$ -	$ 1,070	$ -	$ -	$ 1,070
Investments:					
Series 2023					
Construction	$ -	$ -	$ 4	$ -	$ 4
Reserve	$ -	$ 191,384	$ -	$ -	$ 191,384
Revenue	$ -	$ 409,149	$ -	$ -	$ 409,149
Series 2025					
Construction	$ -	$ -	$ 15,218	$ -	$ 15,218
Reserve	$ -	$ 378,725	$ -	$ -	$ 378,725
Revenue	$ -	$ 500,170	$ -	$ -	$ 500,170
Total Assets	**$ 674,708**	**$ 1,480,498**	**$ 15,222**	**$ 103,537**	**$ 2,273,965**
Liabilities:					
Accounts Payable	$ 18,736	$ -	$ -	$ -	$ 18,736
Due to Debt Service	$ 1,070	$ -	$ -	$ -	$ 1,070
Total Liabilites	**$ 19,806**	**$ -**	**$ -**	**$ -**	**$ 19,806**
Fund Balance:					
Restricted for:					
Debt Service Series 2023	$ -	$ 601,193	$ -	$ -	$ 601,193
Debt Service Series 2025	$ -	$ 879,306	$ -	$ -	$ 879,306
Capital Projects Series 2023	$ -	$ -	$ 4	$ -	$ 4
Capital Projects Series 2025	$ -	$ -	$ 15,218	$ -	$ 15,218
Assigned for:					
Capital Reserve	$ -	$ -	$ -	$ 103,537	$ 103,537
Unassigned	$ 654,902	$ -	$ -	$ -	$ 654,902
Total Fund Balances	**$ 654,902**	**$ 1,480,498**	**$ 15,222**	**$ 103,537**	**$ 2,254,159**
Total Liabilities & Fund Balance	$ 674,708	$ 1,480,498	$ 15,222	$ 103,537	$ 2,273,965

Ranches at Lake McLeod

Community Development District

General Fund

Statement of Revenues, Expenditures, and Changes in Fund Balance

For The Period Ending January 31, 2026

	Adopted Budget	Prorated Budget Thru 01/31/26	Actual Thru 01/31/26	Variance
Revenues:				
Assessments - Tax Roll	$ 413,177	$ 387,457	$ 387,457	$ -
Assessments - Direct	$ 324,022	$ 162,008	$ 162,008	$ -
Interest Income	$ -	$ -	$ 3,510	$ 3,510
Total Revenues	**$ 737,200**	**$ 549,464**	**$ 552,974**	**$ 3,510**
Expenditures:				
General & Administrative:				
Supervisor Fees	$ 12,000	$ 4,000	$ 1,600	$ 2,400
FICA Expense	$ 918	$ 306	$ 122	$ 184
Engineering	$ 15,000	$ 5,000	$ 2,325	$ 2,675
Attorney	$ 15,000	$ 5,000	$ 4,669	$ 331
Annual Audit	$ 4,900	$ -	$ -	$ -
Assessment Administration	$ 6,500	$ 6,500	$ 6,500	$ -
Arbitrage	$ 900	$ -	$ -	$ -
Dissemination	$ 6,600	$ 2,200	$ 2,200	$ -
Disclosure Software	$ 3,500	$ 3,500	$ 2,375	$ 1,125
Trustee Fees	$ 9,363	$ 3,192	$ 3,192	$ -
Management Fees	$ 43,775	$ 14,592	$ 14,592	$ -
Information Technology	$ 1,854	$ 618	$ 618	$ -
Website Maintenance	$ 1,236	$ 412	$ 412	$ -
Postage & Delivery	$ 1,000	$ 333	$ 248	$ 85
Insurance	$ 8,079	$ 8,079	$ 6,340	$ 1,739
Copies	$ 500	$ 167	$ 2	$ 165
Legal Advertising	$ 7,500	$ 2,500	$ 985	$ 1,515
Other Current Charges	$ 1,940	$ 647	$ 64	$ 583
Office Supplies	$ 500	$ 167	$ 1	$ 165
Dues, Licenses & Subscriptions	$ 175	$ 175	$ 175	$ -
Total General & Administrative	**$ 141,241**	**$ 57,387**	**$ 46,421**	**$ 10,967**

Ranches at Lake McLeod

Community Development District

General Fund

Statement of Revenues, Expenditures, and Changes in Fund Balance

For The Period Ending January 31, 2026

	Adopted Budget	Prorated Budget Thru 01/31/26	Actual Thru 01/31/26	Variance
Operations & Maintenance				
Field Expenditures				
Property Insurance	$ 11,359	$ 11,359	$ 11,798	$ (439)
Field Management	$ 10,300	$ 3,433	$ 3,433	$ 0
Landscape Maintenance	$ 258,000	$ 86,000	$ 65,320	$ 20,680
Landscape Replacement	$ 30,000	$ 10,000	$ -	$ 10,000
Lake Maintenance	$ 16,800	$ 5,600	$ 3,500	$ 2,100
Streetlights	$ 100,000	$ 33,333	$ 46,216	$ (12,883)
Electric	$ 15,000	$ 5,000	$ 3,443	$ 1,557
Water & Sewer	$ 45,000	$ 15,000	$ 7,559	$ 7,441
Irrigation Repairs	$ 10,000	$ 3,333	$ -	$ 3,333
Sidewalk & Asphalt Maintenance	$ 5,000	$ 1,667	$ -	$ 1,667
Janitorial Maintenance	$ 7,000	$ 2,333	$ 2,230	$ 103
General Repairs & Maintenance	$ 20,000	$ 6,667	$ 490	$ 6,177
Holiday Decorations	$ 2,500	$ 833	$ -	$ 833
Contingency	$ 15,000	$ 5,000	$ -	$ 5,000
Total Operations & Maintenance	**$ 545,959**	**$ 189,559**	**$ 143,990**	**$ 45,569**
Total Expenditures	**$ 687,200**	**$ 246,946**	**$ 190,411**	**$ 56,536**
Excess (Deficiency) of Revenues over Expenditures	$ 50,000		$ 362,563	
Other Financing Sources/(Uses):				
Transfer In/(Out)	$ (50,000)	$ -	$ -	$ -
Total Other Financing Sources/(Uses)	**$ (50,000)**	**$ -**	**$ -**	**$ -**
Net Change in Fund Balance	**$ -**		**$ 362,563**	
Fund Balance - Beginning	$ -		$ 292,339	
Fund Balance - Ending	$ -		$ 654,902	

Ranches at Lake McLeod

Community Development District

Debt Service Fund - Series 2023

Statement of Revenues, Expenditures, and Changes in Fund Balance

For The Period Ending January 31, 2026

	Adopted Budget	Prorated Budget Thru 01/31/26	Actual Thru 01/31/26	Variance
Revenues				
Assessments - On Roll	$ 382,769	$ 358,940	$ 358,940	$ -
Interest	$ 7,851	$ 2,617	$ 4,013	$ 1,396
Total Revenues	**$ 390,620**	**$ 361,557**	**$ 362,953**	**$ 1,396**
Expenditures				
Interest - 12/15	$ 146,463	$ 146,463	$ 146,463	$ -
Prinicpal - 6/15	$ 90,000	$ -	$ -	$ -
Interest - 6/15	$ 146,463	$ -	$ -	$ -
Total Expenditures	**$ 382,925**	**$ 146,463**	**$ 146,463**	**$ -**
Excess (Deficiency) of Revenues over Expenditures	**$ 7,695**		**$ 216,491**	
Fund Balance - Beginning	$ 190,323		$ 384,702	
Fund Balance - Ending	$ 198,017		$ 601,193	

Ranches at Lake McLeod

Community Development District

Debt Service Fund - Series 2025

Statement of Revenues, Expenditures, and Changes in Fund Balance

For The Period Ending January 31, 2026

	Adopted Budget	Prorated Budget Thru 01/31/26	Actual Thru 01/31/26	Variance
Revenues				
Assessments - On Roll	$ 239,010	$ 224,130	$ 224,130	$ -
Assessments - Direct	$ 518,440	$ 259,220	$ 259,220	$ -
Interest	$ 1,625	$ 1,625	$ 8,885	$ 7,260
Total Revenues	**$ 759,075**	**$ 484,975**	**$ 492,235**	**$ 7,260**
Expenditures				
Interest - 12/15	$ 297,471	$ 297,471	$ 297,471	$ -
Prinicpal - 6/15	$ 165,000	$ -	$ -	$ -
Interest - 6/15	$ 297,471	$ -	$ -	$ -
Total Expenditures	**$ 759,943**	**$ 297,471**	**$ 297,471**	**$ -**
Excess (Deficiency) of Revenues over Expenditures	**$ (868)**		**$ 194,764**	
Other Financing Sources/(Uses)				
Transfer In/(Out)	$ -	$ -	$ 106	$ 106
Total Other Financing Sources (Uses)	**$ -**	**$ -**	**$ 106**	**$ 106**
Net Change in Fund Balance	**$ (868)**		**$ 194,870**	
Fund Balance - Beginning	$ 300,720		$ 684,436	
Fund Balance - Ending	$ 299,853		$ 879,306	

Ranches at Lake McLeod

Community Development District

Capital Projects Fund - Series 2023

Statement of Revenues, Expenditures, and Changes in Fund Balance

For The Period Ending January 31, 2026

	Adopted Budget	Prorated Budget Thru 01/31/26	Actual Thru 01/31/26	Variance
Revenues				
Interest	$ -	$ -	$ 0	$ 0
Total Revenues	**$ -**	**$ -**	**$ 0**	**$ 0**
Expenditures				
Capital Outlay - Construction	$ -	$ -	$ -	$ -
Total Expenditures	**$ -**	**$ -**	**$ -**	**$ -**
Excess (Deficiency) of Revenues over Expenditures	**$ -**		**$ 0**	
Fund Balance - Beginning	$ -		$ 4	
Fund Balance - Ending	$ -		$ 4	

Ranches at Lake McLeod

Community Development District

Capital Projects Fund - Series 2025

Statement of Revenues, Expenditures, and Changes in Fund Balance

For The Period Ending January 31, 2026

	Adopted Budget	Prorated Budget Thru 01/31/26	Actual Thru 01/31/26	Variance
Revenues				
Interest	$ -	$ -	$ 317	$ 317
Total Revenues	**$ -**	**$ -**	**$ 317**	**$ 317**
Expenditures				
Capital Outlay - Construction	$ -	$ -	$ 4,200	$ (4,200)
Total Expenditures	**$ -**	**$ -**	**$ 4,200**	**$ (4,200)**
Excess (Deficiency) of Revenues over Expenditures	**$ -**		**($3,883)**	
Other Financing Sources/(Uses)				
Transfer In/(Out)	$ -	$ -	$ (106)	$ (106)
Total Other Financing Sources (Uses)	**$ -**	**$ -**	**$ (106)**	**$ (106)**
Net Change in Fund Balance	**$ -**		**$ (3,988.45)**	
Fund Balance - Beginning	$ -		$ 19,206	
Fund Balance - Ending	$ -		$ 15,218	

Ranches at Lake McLeod

Community Development District

Capital Reserve Fund

Statement of Revenues, Expenditures, and Changes in Fund Balance

For The Period Ending January 31, 2026

	Adopted Budget	Prorated Budget Thru 01/31/26	Actual Thru 01/31/26	Variance
Revenues				
Interest	$ 986	$ 986	$ 1,163	$ 178
Total Revenues	**$ 986**	**$ 986**	**$ 1,163**	**$ 178**
Expenditures				
Capital Outlay	$ -	$ -	$ -	$ -
Total Expenditures	**$ -**	**$ -**	**$ -**	**$ -**
Excess (Deficiency) of Revenues over Expenditures	**$ 986**		**$ 1,163**	
Other Financing Sources/(Uses)				
Transfer In/(Out)	$ 50,000	$ -	$ -	$ -
Total Other Financing Sources (Uses)	**$ 50,000**	**$ -**	**$ -**	**$ -**
Net Change in Fund Balance	**$ 50,986**		**$ 1,163**	
Fund Balance - Beginning	$ 100,000		$ 102,373	
Fund Balance - Ending	$ 150,986		$ 103,537	

Ranches at Lake McLeod

Community Development District

Month to Month

	Oct	Nov	Dec	Jan	Feb	March	April	May	June	July	Aug	Sept	Total
Revenues:													
Assessments - Tax Roll	$ -	$ 28,849	$ 356,618	$ 1,990	$ -	$ -	$ -	$ -	$ -	$ -	$ -	$ -	$ 387,457
Assessments - Direct	$ 162,008	$ -	$ -	$ -	$ -	$ -	$ -	$ -	$ -	$ -	$ -	$ -	$ 162,008
Interest Income	$ 748	$ 702	$ 702	$ 1,358	$ -	$ -	$ -	$ -	$ -	$ -	$ -	$ -	$ 3,510
Total Revenues	**$ 162,755**	**$ 29,551**	**$ 357,320**	**$ 3,347**	**$ -**	**$ -**	**$ -**	**$ -**	**$ -**	**$ -**	**$ -**	**$ -**	**$ 552,974**
Expenditures:													
General & Administrative:													
Supervisor Fees	$ -	$ -	$ 800	$ 800	$ -	$ -	$ -	$ -	$ -	$ -	$ -	$ -	$ 1,600
FICA Expense	$ -	$ -	$ 61	$ 61	$ -	$ -	$ -	$ -	$ -	$ -	$ -	$ -	$ 122
Engineering	$ 300	$ 1,725	$ 300	$ -	$ -	$ -	$ -	$ -	$ -	$ -	$ -	$ -	$ 2,325
Attorney	$ 2,398	$ 1,335	$ 120	$ 816	$ -	$ -	$ -	$ -	$ -	$ -	$ -	$ -	$ 4,669
Annual Audit	$ -	$ -	$ -	$ -	$ -	$ -	$ -	$ -	$ -	$ -	$ -	$ -	$ -
Assessment Administration	$ 6,500	$ -	$ -	$ -	$ -	$ -	$ -	$ -	$ -	$ -	$ -	$ -	$ 6,500
Arbitrage	$ -	$ -	$ -	$ -	$ -	$ -	$ -	$ -	$ -	$ -	$ -	$ -	$ -
Dissemination	$ 550	$ 550	$ 550	$ 550	$ -	$ -	$ -	$ -	$ -	$ -	$ -	$ -	$ 2,200
Disclosure Software	$ 2,375	$ -	$ -	$ -	$ -	$ -	$ -	$ -	$ -	$ -	$ -	$ -	$ 2,375
Trustee Fees	$ 3,192	$ -	$ -	$ -	$ -	$ -	$ -	$ -	$ -	$ -	$ -	$ -	$ 3,192
Management Fees	$ 3,648	$ 3,648	$ 3,648	$ 3,648	$ -	$ -	$ -	$ -	$ -	$ -	$ -	$ -	$ 14,592
Information Technology	$ 155	$ 155	$ 155	$ 155	$ -	$ -	$ -	$ -	$ -	$ -	$ -	$ -	$ 618
Website Maintenance	$ 103	$ 103	$ 103	$ 103	$ -	$ -	$ -	$ -	$ -	$ -	$ -	$ -	$ 412
Postage & Delivery	$ 8	$ 17	$ 5	$ 218	$ -	$ -	$ -	$ -	$ -	$ -	$ -	$ -	$ 248
Insurance	$ 6,340	$ -	$ -	$ -	$ -	$ -	$ -	$ -	$ -	$ -	$ -	$ -	$ 6,340
Copies	$ 2	$ -	$ -	$ -	$ -	$ -	$ -	$ -	$ -	$ -	$ -	$ -	$ 2
Legal Advertising	$ 985	$ -	$ -	$ -	$ -	$ -	$ -	$ -	$ -	$ -	$ -	$ -	$ 985
Other Current Charges	$ 17	$ -	$ -	$ 46	$ -	$ -	$ -	$ -	$ -	$ -	$ -	$ -	$ 64
Office Supplies	$ 0	$ 0	$ 0	$ 0	$ -	$ -	$ -	$ -	$ -	$ -	$ -	$ -	$ 1
Dues, Licenses & Subscriptions	$ 175	$ -	$ -	$ -	$ -	$ -	$ -	$ -	$ -	$ -	$ -	$ -	$ 175
Total General & Administrative	**$ 26,749**	**$ 7,532**	**$ 5,742**	**$ 6,398**	**$ -**	**$ -**	**$ -**	**$ -**	**$ -**	**$ -**	**$ -**	**$ -**	**$ 46,421**

Ranches at Lake McLeod

Community Development District

Month to Month

	Oct	Nov	Dec	Jan	Feb	March	April	May	June	July	Aug	Sept	Total
Operations & Maintenance													
Field Expenditures													
Property Insurance	$ 8,360	$ 3,438	$ -	$ -	$ -	$ -	$ -	$ -	$ -	$ -	$ -	$ -	$ 11,798
Field Management	$ 858	$ 858	$ 858	$ 858	$ -	$ -	$ -	$ -	$ -	$ -	$ -	$ -	$ 3,433
Landscape Maintenance	$ 15,580	$ 16,580	$ 16,580	$ 16,580	$ -	$ -	$ -	$ -	$ -	$ -	$ -	$ -	$ 65,320
Landscape Replacement	$ -	$ -	$ -	$ -	$ -	$ -	$ -	$ -	$ -	$ -	$ -	$ -	$ -
Lake Maintenance	$ 875	$ 875	$ 875	$ 875	$ -	$ -	$ -	$ -	$ -	$ -	$ -	$ -	$ 3,500
Streetlights	$ 11,220	$ 11,220	$ 11,220	$ 12,556	$ -	$ -	$ -	$ -	$ -	$ -	$ -	$ -	$ 46,216
Electric	$ 656	$ 570	$ 1,597	$ 620	$ -	$ -	$ -	$ -	$ -	$ -	$ -	$ -	$ 3,443
Water & Sewer	$ 1,733	$ 2,112	$ 1,280	$ 2,434	$ -	$ -	$ -	$ -	$ -	$ -	$ -	$ -	$ 7,559
Irrigation Repairs	$ -	$ -	$ -	$ -	$ -	$ -	$ -	$ -	$ -	$ -	$ -	$ -	$ -
Sidewalk & Asphalt Maintenance	$ -	$ -	$ -	$ -	$ -	$ -	$ -	$ -	$ -	$ -	$ -	$ -	$ -
Janitorial Maintenance	$ 560	$ 560	$ 550	$ 560	$ -	$ -	$ -	$ -	$ -	$ -	$ -	$ -	$ 2,230
General Repairs & Maintenance	$ -	$ 200	$ -	$ 290	$ -	$ -	$ -	$ -	$ -	$ -	$ -	$ -	$ 490
Holiday Decorations	$ -	$ -	$ -	$ -	$ -	$ -	$ -	$ -	$ -	$ -	$ -	$ -	$ -
Contingency	$ -	$ -	$ -	$ -	$ -	$ -	$ -	$ -	$ -	$ -	$ -	$ -	$ -
Total Operations & Maintenance	**$ 39,842**	**$ 36,414**	**$ 32,961**	**$ 34,773**	**$ -**	**$ -**	**$ -**	**$ -**	**$ -**	**$ -**	**$ -**	**$ -**	**$ 143,990**
Total Expenditures	**$ 66,590**	**$ 43,947**	**$ 38,703**	**$ 41,171**	**$ -**	**$ -**	**$ -**	**$ -**	**$ -**	**$ -**	**$ -**	**$ -**	**$ 190,411**
Excess (Deficiency) of Revenues over Expenditures	$ 96,165	$ (14,396)	$ 318,617	$ (37,823)	$ -	$ -	$ -	$ -	$ -	$ -	$ -	$ -	$ 362,563
Other Financing Sources/(Uses):													
Transfer In/(Out)	$ -	$ -	$ -	$ -	$ -	$ -	$ -	$ -	$ -	$ -	$ -	$ -	$ -
Total Other Financing Sources/(Uses)	**$ -**	**$ -**	**$ -**	**$ -**	**$ -**	**$ -**	**$ -**	**$ -**	**$ -**	**$ -**	**$ -**	**$ -**	**$ -**
Net Change in Fund Balance	**$ 96,165**	**$ (14,396)**	**$ 318,617**	**$ (37,823)**	**$ -**	**$ -**	**$ -**	**$ -**	**$ -**	**$ -**	**$ -**	**$ -**	**$ 362,563**

Ranches At Lake Mcleod

Community Development District

Special Assessment Receipts

Fiscal Year 2026

ON ROLL ASSESSMENTS

Gross Assessments	$ 444,279.32	$ 411,580.56	$ 257,000.31	$ 1,112,860.19
Net Assessments	$ 413,179.77	$ 382,769.92	$ 239,010.29	$ 1,034,959.98

								40%	37%	23%	100%
Date	*Distribution*	*Gross Amount*	*Discount/Penalty*	*Commision*	*Interest*	*Property Appraiser*	*Net Receipts*	*General Fund*	*Debt Service 2023*	*Debt Service 2025*	*Total*
11/14/25	10/01-10/31/25	$ 2,044.23	$ (81.78)	$ (39.25)	$ -	$ -	$ 1,923.20	$ 767.78	$ 711.28	$ 444.14	$ 1,923.20
11/14/25	10/01-10/31/25	$ 3,343.46	$ (133.71)	$ (64.20)	$ -	$ -	$ 3,145.55	$ 1,255.78	$ 1,163.35	$ 726.42	$ 3,145.55
11/21/25	11/01-11/07/25	$ 17,035.25	$ (681.49)	$ (327.08)	$ -	$ -	$ 16,026.68	$ 6,398.22	$ 5,927.31	$ 3,701.15	$ 16,026.68
11/21/25	11/01-11/07/25	$ 26,087.30	$ (1,043.39)	$ (500.88)	$ -	$ -	$ 24,543.03	$ 9,798.14	$ 9,077.00	$ 5,667.89	$ 24,543.03
11/26/25	11/08-11/15/25	$ 10,902.56	$ (436.16)	$ (209.33)	$ -	$ -	$ 10,257.07	$ 4,094.86	$ 3,793.48	$ 2,368.73	$ 10,257.07
11/26/25	11/08-11/15/25	$ 17,396.74	$ (695.80)	$ (334.02)	$ -	$ -	$ 16,366.92	$ 6,534.05	$ 6,053.15	$ 3,779.72	$ 16,366.92
12/08/25	11/16-11/25/25	$ 187,374.36	$ (7,494.35)	$ (3,597.60)	$ -	$ -	$ 176,282.41	$ 70,375.98	$ 65,196.34	$ 40,710.09	$ 176,282.41
12/08/26	11/16-11/25/25	$ 121,972.39	$ (4,879.53)	$ (2,341.86)	$ -	$ -	$ 114,751.00	$ 45,811.23	$ 42,439.55	$ 26,500.22	$ 114,751.00
12/17/25	INV#4652331	$ (6,685.81)	$ -	$ -	$ -	$ -	$ (6,685.81)	$ (2,669.13)	$ (2,472.68)	$ (1,544.00)	$ (6,685.81)
12/17/25	INV#4652332	$ (4,442.79)	$ -	$ -	$ -	$ -	$ (4,442.79)	$ (1,773.67)	$ (1,643.12)	$ (1,026.00)	$ (4,442.79)
12/19/25	11/26-11/30/25	$ 386,013.83	$ (15,439.19)	$ (7,411.49)	$ -	$ -	$ 363,163.15	$ 144,983.06	$ 134,312.37	$ 83,867.72	$ 363,163.15
12/19/25	11/26-11/30/25	$ 259,617.21	$ (10,386.02)	$ (4,984.62)	$ -	$ -	$ 244,246.57	$ 97,508.83	$ 90,332.23	$ 56,405.51	$ 244,246.57
12/31/25	12/01-12/15/25	$ 4,678.84	$ (1,228.38)	$ (69.01)	$ -	$ -	$ 3,381.45	$ 1,349.95	$ 1,250.60	$ 780.90	$ 3,381.45
12/31/25	12/01-12/15/25	$ 3,407.05	$ (769.99)	$ (52.74)	$ -	$ -	$ 2,584.32	$ 1,031.72	$ 955.79	$ 596.81	$ 2,584.32
1/9/26	12/16-12/31/25	$ 2,006.53	$ (60.19)	$ (38.93)	$ -	$ -	$ 1,907.41	$ 761.48	$ 705.44	$ 440.49	$ 1,907.41
1/9/26	12/16-12/31/25	$ 1,362.82	$ (40.88)	$ (26.44)	$ -	$ -	$ 1,295.50	$ 517.19	$ 479.13	$ 299.18	$ 1,295.50
1/29/26	10/01-12/31/25	$ -	$ -	$ -	$ 1,070.28	$ -	$ 1,070.28	$ 427.28	$ 395.83	$ 247.17	$ 1,070.28
1/29/26	10/01-12/31/25	$ -	$ -	$ -	$ 710.90	$ -	$ 710.90	$ 283.81	$ 262.92	$ 164.17	$ 710.90
	Total	$ 1,032,113.97	$ (43,370.86)	$ (19,997.45)	$ 1,781.18	$ -	$ 970,526.84	$ 387,456.56	$ 358,939.97	$ 224,130.31	$ 970,526.84

93.77%	Net Percentage Collected
$ 64,433.14	Balance Remaining To Collect

DIRECT BILL ASSESSMENTS

Lennar Homes, LLC						
2026-01			Net Assessments	$ 842,455.09	$ 324,015.38	$ 518,439.71
Date Received	Due Date	Check Number	Net Assessed	Amount Received	General Fund	Series 2025 Debt
10/27/25	11/1/25	2557437	$ 421,227.55	$ 421,227.55	$ 162,007.69	$ 259,219.86
	2/1/26		$ 210,613.77			
	5/1/26		$ 210,613.77			
			$ 842,455.09	$ 421,227.55	$ 162,007.69	$ 259,219.86

Ranches at Lake McLeod

Community Development District

Long Term Debt Report

Series 2023, Special Assessment Revenue Bonds		
Interest Rate:	4.625%, 5.250%, 5.500%	
Maturity Date:	6/15/2053	
Reserve Fund Definition	50% Maximum Annual Debt Service	
Reserve Fund Requirement	$191,384	
Reserve Fund Balance	$191,384	
Bonds Outstanding - 6/27/23		$5,665,000
Less: Principal Payment - 6/15/24		($80,000)
Less: Principal Payment - 6/15/25		($85,000)
Current Bonds Outstanding		**$5,500,000**

Series 2025, Special Assessment Revenue Bonds		
Interest Rate:	4.250%, 4.550%, 5.450%, 5.650%	
Maturity Date:	6/15/2055	
Reserve Fund Definition	50% Maximum Annual Debt Service	
Reserve Fund Requirement	$378,725	
Reserve Fund Balance	$378,725	
Bonds Outstanding - 3/27/25		$11,085,000
Current Bonds Outstanding		**$11,085,000**

SECTION E

SECTION iii

SECTION a)

REQUISITION

RANCHES AT LAKE MCLEOD COMMUNITY DEVELOPMENT DISTRICT
SPECIAL ASSESSMENT BONDS, SERIES 2025
(ASSESSMENT AREA TWO)

(Acquisition and Construction)

The undersigned, a Responsible Officer of the Ranches at Lake McLeod Community Development District (the "District") hereby submits the following requisition for disbursement under and pursuant to the terms of the Master Trust Indenture between the District and U.S. Bank Trust Company, National Association, as trustee (the "Trustee"), dated as of June 1, 2023, as supplemented by that certain Second Supplemental Trust Indenture dated as of February 1, 2025 (collectively, the "Indenture") (all capitalized terms used herein shall have the meaning ascribed to such term in the Indenture):

(A) Requisition Number: 10

(B) Identify Acquisition Agreement, if applicable:

(C) Name of Payee: TraceAir Technologies Inc

(D) Amount Payable: $1,310.00

(E) Purpose for which paid or incurred (refer also to specific contract if amount is due and payable pursuant to a contract involving progress payments): Invoice # 28905 - Gold Scan for Dec 2025

(F) Fund or Account and subaccount, if any, from which disbursement to be made:

Series 2025 Acquisition and Construction Account of the Acquisition and Construction Fund.

The undersigned hereby certifies that:

1. obligations in the stated amount set forth above have been incurred by the District;

2. each disbursement set forth above is a proper charge against the Series 2025 Acquisition and Construction Account;

3. each disbursement set forth above was incurred in connection with the Cost of the 2025 Project; and

4. each disbursement represents a Cost of the 2025 Project which has not previously been paid.

The undersigned hereby further certifies that there has not been filed with or served upon the District notice of any lien, right to lien, or attachment upon, or claim affecting the right to receive

payment of, any of the moneys payable to the Payee set forth above, which has not been released or will not be released simultaneously with the payment hereof.

The undersigned hereby further certifies that such requisition contains no item representing payment on account of any retained percentage which the District is at the date of such certificate entitled to retain.

Originals or copies of the invoice(s) from the vendor of the property acquired or the services rendered with respect to which disbursement is hereby requested are on file with the District.

RANCHES AT LAKE MCLEOD
COMMUNITY DEVELOPMENT
DISTRICT

By: _____
Responsible Officer

Date: 3/2/24

CONSULTING ENGINEER'S APPROVAL FOR
NON-COST OF ISSUANCE OR NON-OPERATING COSTS REQUESTS ONLY

The undersigned Consulting Engineer hereby certifies that this disbursement is for the Cost of the 2025 Project and is consistent with: (i) the Acquisition Agreement; and (ii) the report of the Consulting Engineer, as such report shall have been amended or modified.

Richard C Welch Digitally signed by Richard C Welch
Dn: CN=Richard C Welch, ou=Qualified A01410D00000195DCD82C2700080F94, O=RAM AE GROUP INC., C=US
Date: 2024.02.23 10:44:37-05'00'

_____
Consulting Engineer

REQUISITION

RANCHES AT LAKE MCLEOD COMMUNITY DEVELOPMENT DISTRICT
SPECIAL ASSESSMENT BONDS, SERIES 2025
(ASSESSMENT AREA TWO)

(Acquisition and Construction)

The undersigned, a Responsible Officer of the Ranches at Lake McLeod Community Development District (the "District") hereby submits the following requisition for disbursement under and pursuant to the terms of the Master Trust Indenture between the District and U.S. Bank Trust Company, National Association, as trustee (the "Trustee"), dated as of June 1, 2023, as supplemented by that certain Second Supplemental Trust Indenture dated as of February 1, 2025 (collectively, the "Indenture") (all capitalized terms used herein shall have the meaning ascribed to such term in the Indenture):

(A) Requisition Number: 11

(B) Identify Acquisition Agreement, if applicable:

(C) Name of Payee: TraceAir Technologies Inc

(D) Amount Payable: $2,100.00

(E) Purpose for which paid or incurred (refer also to specific contract if amount is due and payable pursuant to a contract involving progress payments): Invoice # 29733 - Gold Scan for Jan 2026

(F) Fund or Account and subaccount, if any, from which disbursement to be made:

Series 2025 Acquisition and Construction Account of the Acquisition and Construction Fund.

The undersigned hereby certifies that:

1. obligations in the stated amount set forth above have been incurred by the District;

2. each disbursement set forth above is a proper charge against the Series 2025 Acquisition and Construction Account;

3. each disbursement set forth above was incurred in connection with the Cost of the 2025 Project; and

4. each disbursement represents a Cost of the 2025 Project which has not previously been paid.

The undersigned hereby further certifies that there has not been filed with or served upon the District notice of any lien, right to lien, or attachment upon, or claim affecting the right to receive

payment of, any of the moneys payable to the Payee set forth above, which has not been released or will not be released simultaneously with the payment hereof.

The undersigned hereby further certifies that such requisition contains no item representing payment on account of any retained percentage which the District is at the date of such certificate entitled to retain.

Originals or copies of the invoice(s) from the vendor of the property acquired or the services rendered with respect to which disbursement is hereby requested are on file with the District.

RANCHES AT LAKE MCLEOD
COMMUNITY DEVELOPMENT
DISTRICT

By: _____
Responsible Officer

Date: 3/2/26

CONSULTING ENGINEER'S APPROVAL FOR
NON-COST OF ISSUANCE OR NON-OPERATING COSTS REQUESTS ONLY

The undersigned Consulting Engineer hereby certifies that this disbursement is for the Cost of the 2025 Project and is consistent with: (i) the Acquisition Agreement; and (ii) the report of the Consulting Engineer, as such report shall have been amended or modified.

Richard C Welch Digitally signed by Richard C Welch
DN: CN=Richard C Welch, dnQualifier=A01410D000000195DCD82C2700080F94, O=PRIME AE GROUP INC., C=US
Date: 2026.03.02 09:09:47-05'00'

_____
Consulting Engineer

INVOICE

TraceAir Technologies, Inc
1700 Westlake Ave N Ste 200 PMB 2001
Seattle, WA 98109

billing@traceair.net
+1 (206) 437-4290
traceair.net

Lennar Homes:Governmental Management Services - Central Florida, LLC

Bill to
Governmental Management Services -
Central Florida, LLC
219 East Livingston St
Orlando, FL 32801 USA

Invoice details
Invoice no.: 29733
Terms: Net 30
Invoice date: 01/31/2026
Due date: 03/02/2026

Project: Ranches at lake McLeod

#	Date	Product or service	Description	Qty	Rate	Amount
1.		**Gold Scan**	1/6/2026, 1/20/2026	2	$1,050.00	$2,100.00

Total **$2,100.00**

Ways to pay

BANK

INVOICE

TraceAir Technologies, Inc
1700 Westlake Ave N Ste 200 PMB 2001
Seattle, WA 98109

billing@traceair.net
+1 (206) 437-4290
traceair.net

Lennar Homes:Governmental Management Services - Central Florida, LLC

Bill to
Governmental Management Services - Central Florida, LLC
219 East Livingston St
Orlando, FL 32801 USA

Ship to
Governmental Management Services - Central Florida, LLC
219 East Livingston St
Orlando, FL 32801 USA

Invoice details
Invoice no.: 28905
Terms: Net 30
Invoice date: 12/31/2025
Due date: 01/30/2026

Project: Ranches at lake McLeod

#	Date	Product or service	Description	Qty	Rate	Amount
1.		**Gold Scan**	12/9/2025, 12/23/2025	2	$1,050.00	$2,100.00

Total	**$2,100.00**
Payment	-$790.00
Balance due	**$1,310.00**